2
1 3

1 2 3

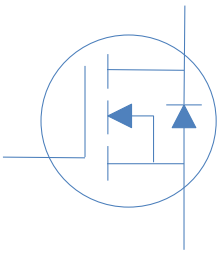

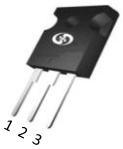
1 2 3

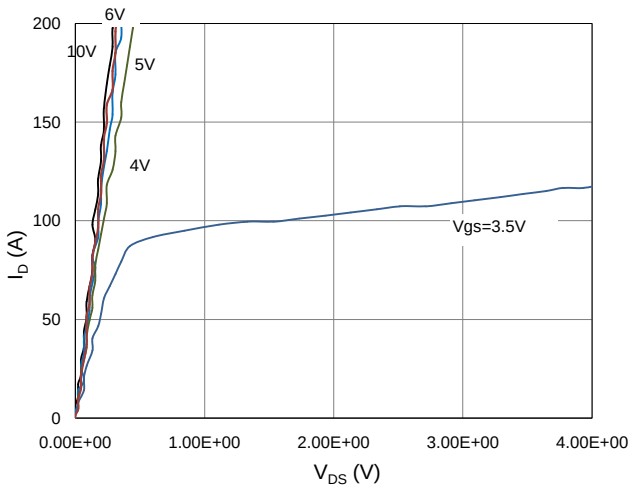
6V
10V
5V
4V
Vgs=3.5V
200
150
100
50
0
0.00E+00
1.00E+00
2.00E+00
3.00E+00
4.00E+00
I_D (A)
V_{DS} (V)

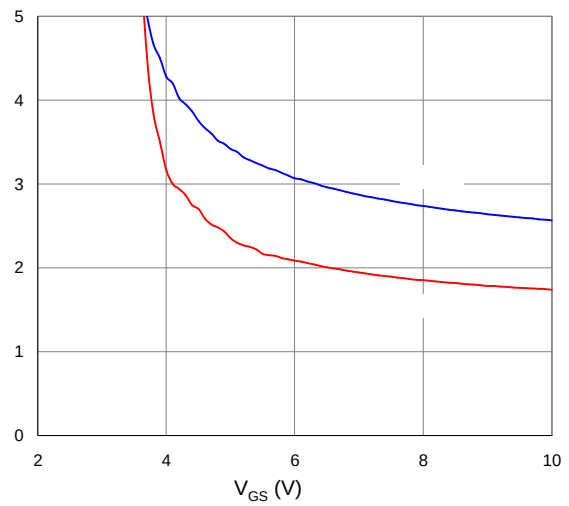
5
4
3
2
1
0
2
4
6
8
10
V_{GS} (V)

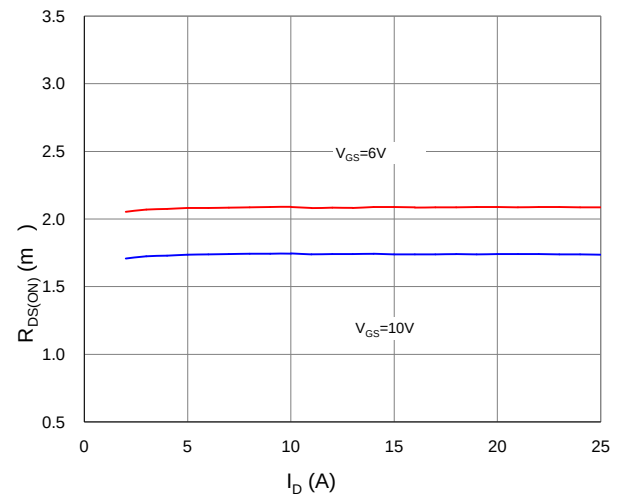
3.5
3.0
2.5
2.0
1.5
1.0
0.5
V_{GS}=6V
V_{GS}=10V
$R_{DS(ON)}$ (m)
0
5
10
15
20
25
I_D (A)

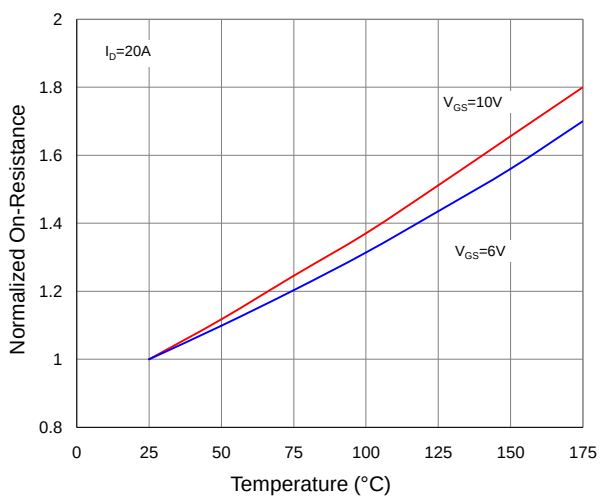
I_D=20A
V_{GS}=10V
V_{GS}=6V
2
1.8
1.6
1.4
1.2
1
0.8
Normalized On-Resistance
0
25
50
75
100
125
150
175
Temperature (°C)

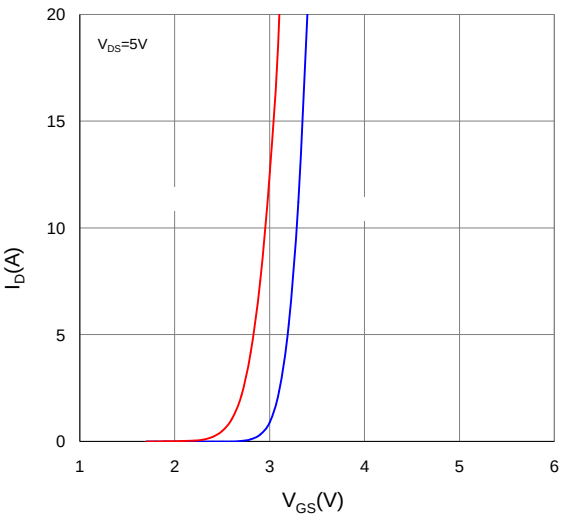
V_{DS}=5V
20
15
10
5
0
I_D(A)
1
2
3
4
5
6
V_{GS}(V)

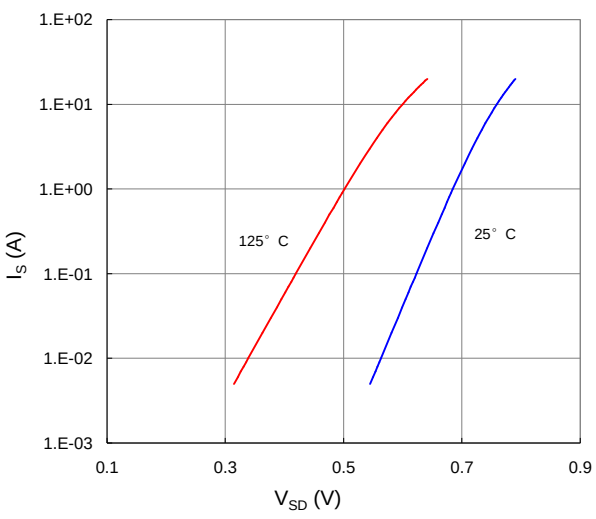
1.E+02
1.E+01
1.E+00
1.E-01
1.E-02
1.E-03
125° C
25° C
I_S (A)
0.1
0.3
0.5
0.7
0.9
V_{SD} (V)

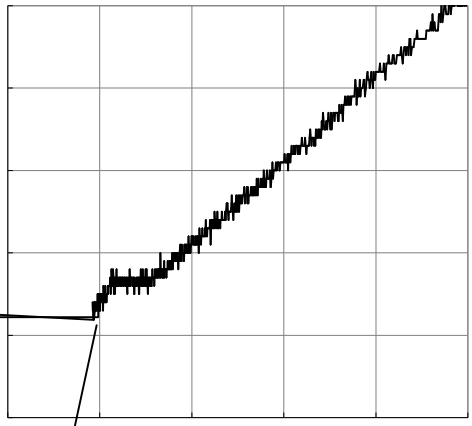

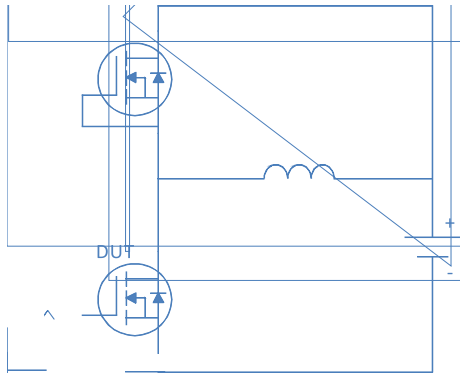
DUT
+
-

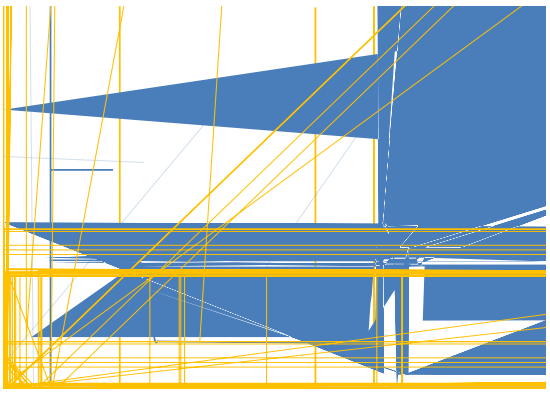

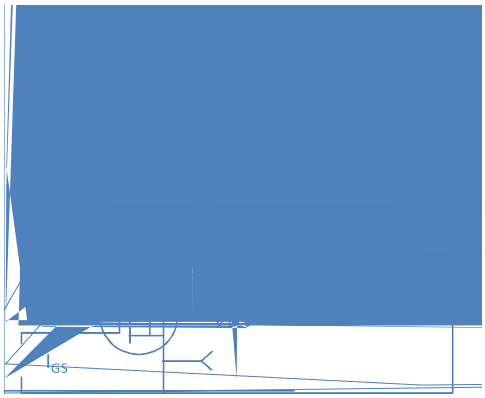
I_{GS}

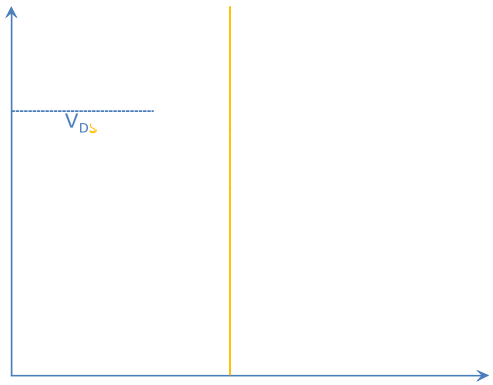
V_{DS}

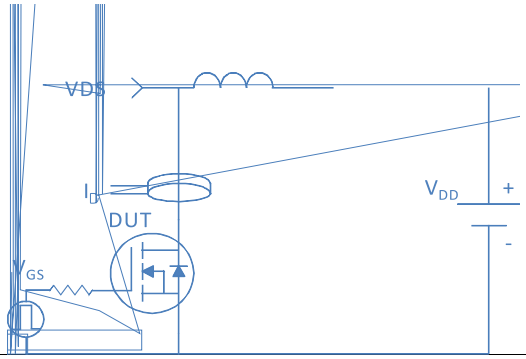
VDS
I_D
DUT
V_{DD}
+
-
V_{GS}

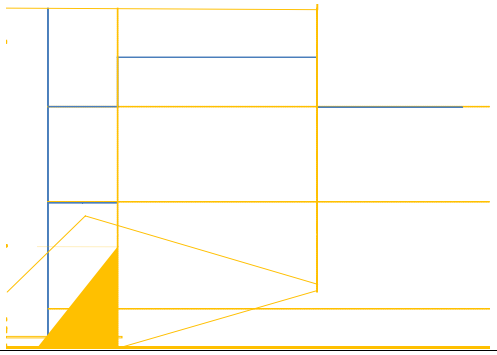

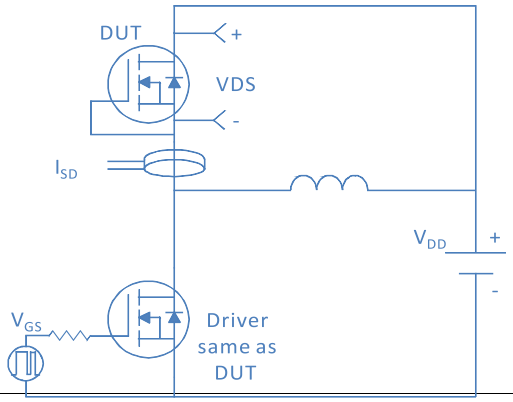
DUT
+
VDS
-
I_{SD}
V_{DD}
+
-
V_{GS}
Driver
same as
DUT

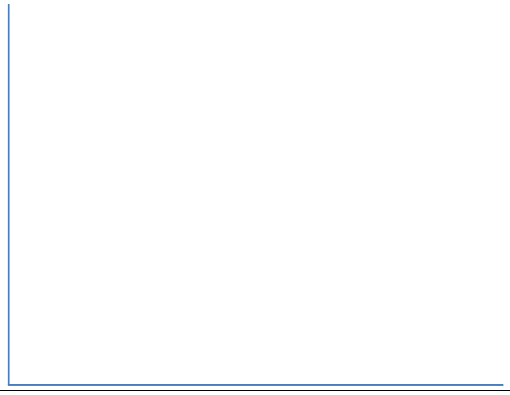

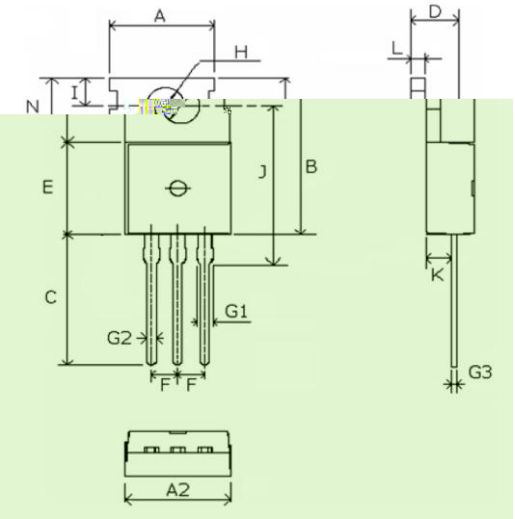
A
H
D
L
N
I
E
J
B
C
G1
G2
F
F
K
G3
A2

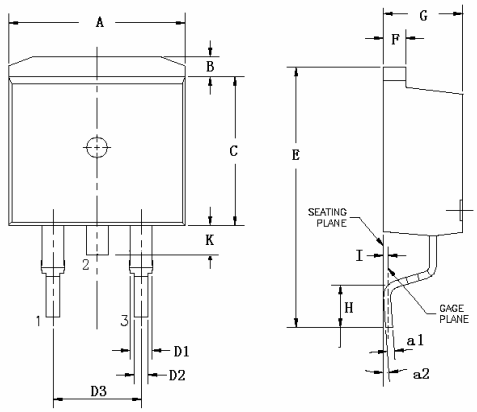
A
B
C
K
1
2
3
D1
D2
D3
G
F
E
SEATING PLANE
I
H
GAGE PLANE
a1
a2